Jistící transformátory proudu SASK 51.6

Prim. vodič (obdél průřez)	50x12 mm
	40x30 mm
Prim. vodič (kruhový průřez)	40 mm ϕ
Šířka transformátoru	95 mm
Plombovací krytka	ANO

Sekundární proud		5A			
Primární proud	Jmenovitý výkon	Třída přesnosti			
		5P5	10P5	5P10	10P10
A	VA	Obj. číslo	Obj. číslo	Obj. číslo	Obj. číslo
150	1,5	S37-1616C	S37-1617C	S37-1608C	S37-1609C
	2,5	S37-1606D	S37-1607D		
200	1,5	S37-1706C	S37-1707C	S37-1708C	S37-1709C
	2,5	S37-1706D	S37-1707D		
	5	S37-1706F	S37-1707F		
250	2,5	S37-1806D	S37-1807D	S37-1808D	S37-1809D
	5	S37-1806F	S37-1807F		
	7,5		S37-1807G		
300	2,5	S37-1906D	S37-1907D	S37-1908D	S37-1909D
	5	S37-1906F	S37-1907F		
	7,5	S37-1906G	S37-1907G		
400	2,5	S37-2006D	S37-2007D	S37-2008D	S37-2009D
	5	S37-2006F	S37-2007F		
	7,5	S37-2006G	S37-2007G		
500	2,5	S37-2106D	S37-2107D	S37-2108D	S37-2109D
	5	S37-2106F	S37-2107F		
	7,5	S37-2106G	S37-2107G		
	10	S37-2106H	S37-2107H		
600	2,5	S37-2206D	S37-2207D	S37-2208D	S37-2209D
	5	S37-2206F	S37-2207F		
	7,5	S37-2206G	S37-2207G		
	10	S37-2206H	S37-2207H		
750	2,5	S37-2306D	S37-2307D	S37-2308D	S37-2309D
	5	S37-2306F	S37-2307F	S37-2308F	S37-2309F
	7,5	S37-2306G	S37-2307G		
	10	S37-2306H	S37-2307H		
1000	2,5	S37-2506D	S37-2507D	S37-2508D	S37-2509D
	5	S37-2506F	S37-2507F	S37-2508F	S37-2509F
	7,5	S37-2506G	S37-2507G		
	10	S37-2506H	S37-2507H		

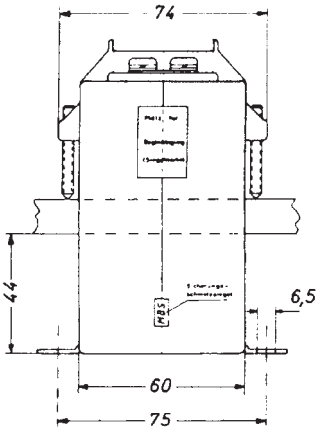

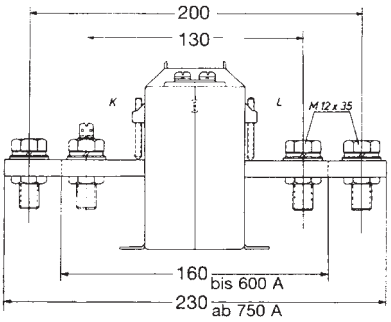

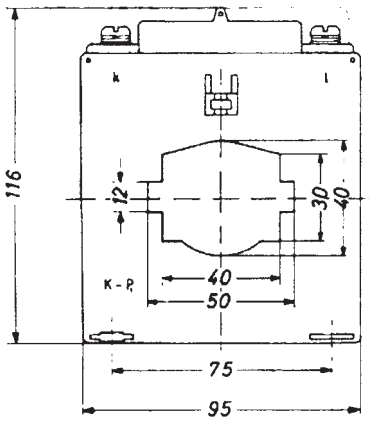

Jistící transformátory proudu SASK 51.6

Prim. vodič (obdél. průřez)	50x12 mm
	40x30 mm
Prim. vodič (kruhový průřez)	40 mm ϕ
Šířka transformátoru	95 mm
Plombovací krytka	ANO
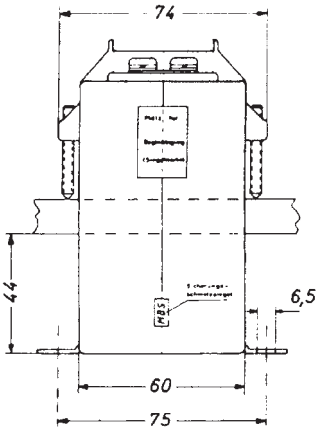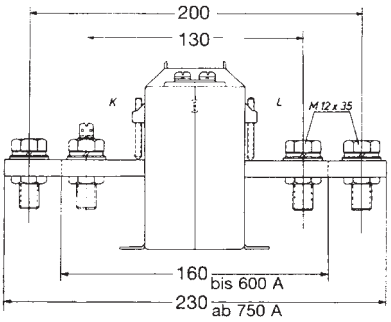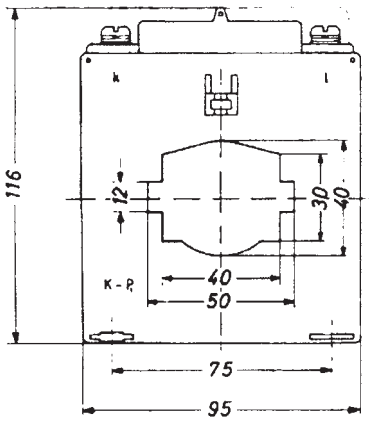
Sekundární proud		1A			
Primární proud	Jmenovitý výkon	Třída přesnosti			
		5P5	10P5	5P10	10P10
A	VA	Obj. číslo	Obj. číslo	Obj. číslo	Obj. číslo
150	1,5	S37-1616C	S37-1617C	S37-1618C	S37-1619C
	2,5	S37-1616D	S37-1617D		
200	1,5	S37-1716C	S37-1717C	S37-1718C	S37-1719C
	2,5	S37-1716D	S37-1717D	S37-1718D	S37-1719D
	5	S37-1716F	S37-1717F		
250	2,5	S37-1816D	S37-1817D	S37-1818D	S37-1819D
	5	S37-1816F	S37-1817F		
	7,5		S37-1817G		
300	2,5	S37-1916D	S37-1917D	S37-1918D	S37-1919D
	5	S37-1916F	S37-1917F		
	7,5		S37-1917G		
400	2,5	S37-2016D	S37-2017D	S37-2018D	S37-2019D
	5	S37-2016F	S37-2017F		
	7,5	S37-2016G	S37-2017G		
500	2,5	S37-2116D	S37-2117D	S37-2118D	S37-2119D
	5	S37-2116F	S37-2117F		S37-2119F
	7,5	S37-2116G	S37-2117G		
	10	S37-2116H	S37-2117H		
600	2,5	S37-2216D	S37-2217D	S37-2218D	S37-2219D
	5	S37-2216F	S37-2217F	S37-2218F	S37-2219F
	7,5	S37-2216G	S37-2217G		
	10	S37-2216H	S37-2217H		
750	2,5	S37-2316D	S37-2317D	S37-2318D	S37-2319D
	5	S37-2316F	S37-2317F	S37-2318F	S37-2319F
	7,5	S37-2316G	S37-2317G		
	10	S37-2316H	S37-2317H		
1000	2,5	S37-2516D	S37-2517D	S37-2518D	S37-2519D
	5	S37-2516F	S37-2517F	S37-2518F	S37-2519F
	7,5	S37-2516G	S37-2517G		
	10	S37-2516H	S37-2517H