Level | Pressure | Flow | Temperature | Liquid Analysis | Registration | Systems Components | Services | Solutions

Technical Information

Ceraphant T PTC31, PTP31, PTP35

Process pressure
Pressure switch for safe measurement and monitoring of absolute and gauge pressures

Application
Pressure switch for monitoring absolute and gauge pressures in gases, vapours, liquids and dust.

Ceraphant T PTC31
– with ceramic sensor diaphragm;
Ceraphant T PTP31
– with metallic sensor diaphragm;
Ceraphant T PTP35
- for hygienic applications.

- Finely graduated measuring ranges from vacuum to 400 bar/6000 psi.
- Versions for use in hygienic applications.
- Electronic versions
  – one PNP switch output
  – two PNP switch outputs
  – PNP switch output with additional analog output 4...20 mA (active).

Your benefits
This compact pressure switch impresses with the latest in technology being used:

- Integrated switching electronics for decentral and economic process monitoring and control.
- Quick and flexible process integration thanks to modular connections.
- High reproducibility and long-term stability.
- Functional safety SIL 2.
- Function check and information on site thanks to LEDs and digital display.
- Ceraphire® sensor diaphragm: corrosion-proof, abrasion-proof and extremely overload-resistant.
- Excellent accuracy and briefest response time right to the smallest measuring range.
- Operation and visualisation also with personal computer and ReadWin®2000.

TI384P/00/en

Endress+Hauser
People for Process Automation

Function and system design

Measuring principle

Ceraphant T PTC 31

The process pressure acts on the ceramic sensor diaphragm and the pressure-dependent change in capacitance of the ceramic sensor is measured. A microprocessor evaluates the signal and switches the output or outputs the corresponding measured value.
The ceramic sensor is a dry sensor i.e. no fill fluid is needed for pressure transmission. This means that the sensor can fully support a vacuum. Extremely high durability, on a par with the material Alloy, is achieved through the use of the highly pure material Ceraphire® as a ceramic.

Ceraphant T PTP 31 and PTP 35

The process pressure acting upon the metallic separating diaphragm of the sensor is transmitted to a resistance bridge via a fluid. The change in the output voltage of the bridge is proportional to the pressure and can be measured directly.

Measuring system

Synopsis

Ceraphant product family	PTC 31	PTP 31	PTP 35
	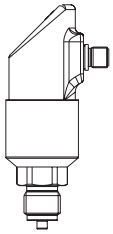 P01-PTC31xxx-14-xx-xx-xx-001	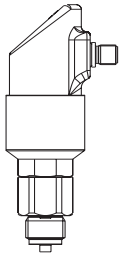 P01-PTP31xxx-14-xx-xx-xx-001	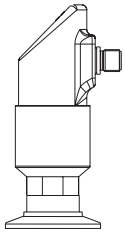 P01-PTP35xxx-14-xx-xx-xx-001
Measuring cell	With capacitive measuring cell and ceramic measuring diaphragm (Ceraphire®)	With piezoresistive measuring cell and metallic measuring diaphragm	With piezoresistive measuring cell and metallic measuring diaphragm for hygienic applications
Field of application	Measurement and monitoring of absolute and gauge pressures	Measurement and monitoring of absolute and gauge pressures	Measurement and monitoring of absolute and gauge pressures in hygienic processes
Process connection	Thread – G ¼ female – G ¼A and G ½A – G ½A, hole 11 mm – M 12x1.5 – 7/16-20 UNF – ¼ FNPT and ½ MNPT	Thread – G ¼ female – G ¼A and G ½A – G ½A, hole 11 mm – M 12x1.5 – 7/16-20 UNF – ¼ FNPT and ½ MNPT	Hygiene – Clamp ½" - 2" – G 1A – Varivent F, N – DIN 11851 – APV inline
Measuring range	0...100 mbar/1.5 psi to 0...40 bar/600 psi	0...1 bar/15 psi to 0...400 bar/6000 psi	0...1 bar/15 psi to 0...40 bar/600 psi
Process temperature	–40 °C...+100 °C	–40 °C...+100 °C	–40 °C...+100 °C (135 °C max. 1 hour)

DC voltage version

Positive signal at electronics switch output (PNP).
Power supply, e.g. with a transmitter power supply unit.
Preferred in conjunction with programmable logic controllers (PLC) or to control relays.

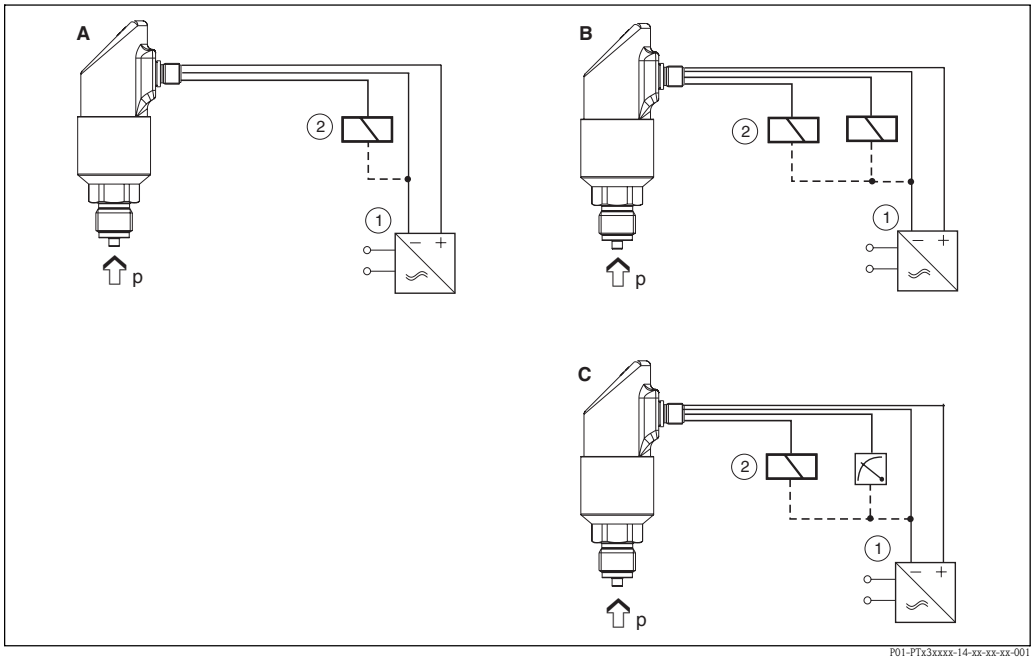

A: 1x PNP switch output
B: 2x PNP switch output
C: PNP switch output with additional analog output 4...20 mA (active).

① *Transmitter power supply unit*
② *Load (e.g. programmable logic controller, process control system, relay)*

Functional safety (SIL)

The Ceraphant T pressure switches were developed according to the standards IEC 61508 and IEC 61511-1 (FDIS). The device version with PNP switch output and additional analog output is equipped with fault detection and fault prevention facilities within the electronics and software. This device version can therefore be used to monitor limit pressure up to SIL 2 (Safety Integrity Level).
The attainable SIL value is determined by the safety technical characteristics of probability of failure, hardware fault tolerance and the safe failure fraction. Details on this may be found in the Functional Safety Manual SD 176P (in development).

Input

Measured variable

The measured variable for the pressure switch can be selected as either gauge pressure or absolute pressure.

Measuring range

Measuring ranges up to 400 bar/6000 psi, see "Ordering information" section.

Output

Output signal

DC voltage version:
Positive voltage signal (rate depends on power supply voltage) at electronics switch output (PNP).
Short-circuit proof version.

- 1x PNP switch output
- 2x PNP switch output

- PNP switch output with additional active analog output
  The analog output 4...20 mA continuously represents the measuring range configured or specified by the sensor.

Range of adjustment

- Switch point: 0.5...100 % in increments of 0.1 % (min. 1 mbar) of the upper range limit (URL)
- Switch-back point: 0...99.5 % in increments of 0.1 % (min. 1 mbar) of the upper range limit (URL)
- Analog output: lower range value (LRV) and upper range value (URV) can be set anywhere within the sensor range (LRL – URL). Turn down of the analog output up to 4:1 of the upper range limit (URL).
- Damping: can be set anywhere between 0...40 s in increments of 0.1 s

LRL = Lower Range Limit
URL = Upper Range Limit
LRV = Lower Range Value
URV = Upper Range Value

Switching capacity

DC voltage version:

- Switch status ON: $I_a \leq 250$ mA
- Switch status OFF: $I_a \leq 1$ mA
- Switching cycles: > 10,000,000
- Voltage drop PNP: ≤ 2 V
- Overload resistance
  Automatic load check of switching current;
  max. capacitance load: 14 µF at max. supply voltage (without resistive load)
  max. period length: 0.5 s; min. t_{on}: 40 µs
  Periodic disconnection from a protective circuit in event of overcurrent (f = 2 Hz) and indication of "Warning"

Input PLC

Input impedance $R_i \leq 2$ kΩ
Input current $I_i \geq 10$ mA

Inductive load

To prevent electrical interference, only operate an inductive load (relays, contactors, solenoid valves) when directly connected to a protective circuit (free-wheeling diode or capacitor).

Power supply

Electrical connection

Connector and cable connection

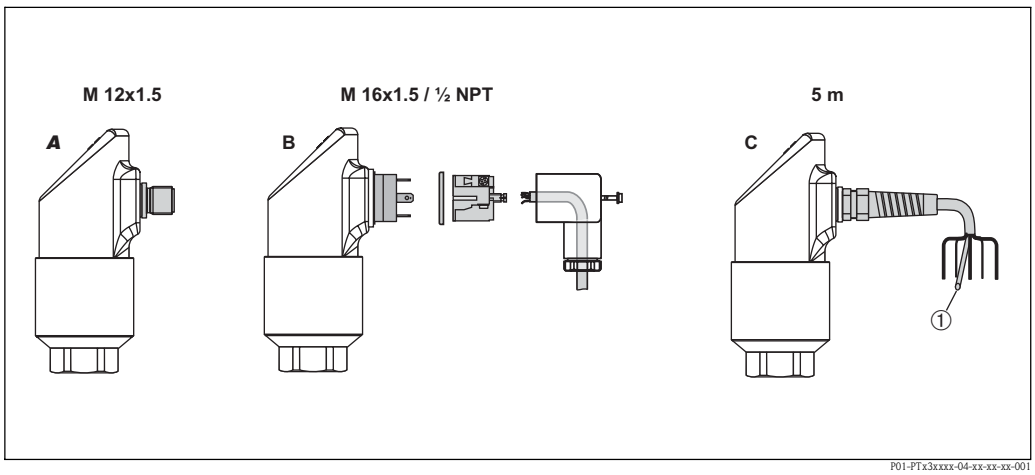

A: M 12x1.5 connector
B: M 16x1.5 or ½ NPT valve plug
C: cable, 5 m long, 5-core (① reference pressure supply)

Device connection

- DC voltage version with M 12x1.5 connector

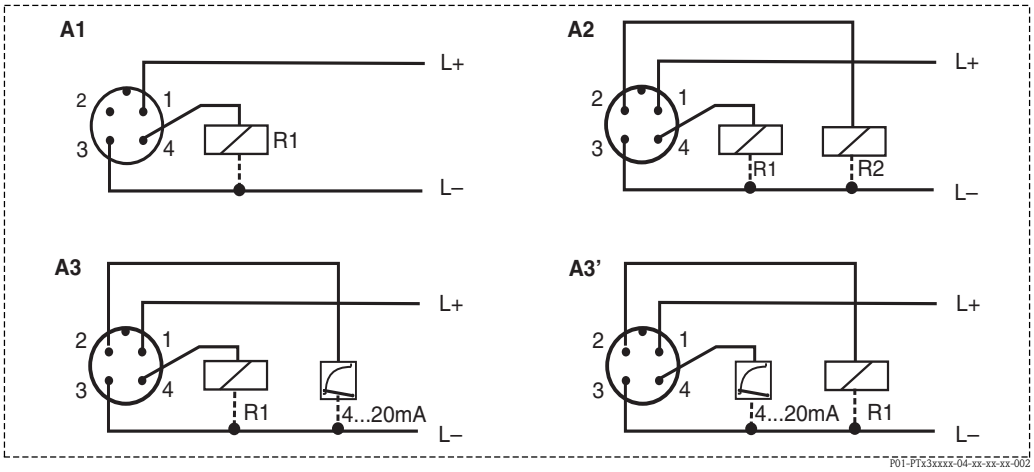

A1: 1x PNP switch output
A2: 2x PNP switch output (in conformity with DESINA)
A3: PNP switch output with additional analog output
A3': PNP switch output with additional analog output (PIN assignment with "DESINA" setting)

- DC voltage version with M 16x1.5 or ½ NPT valve plug

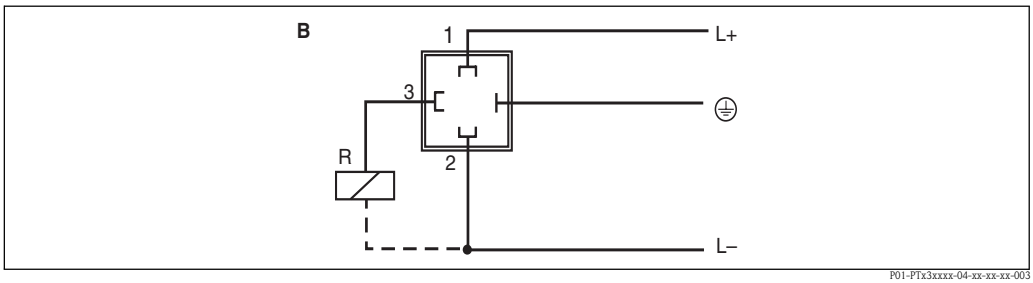

B: 1x PNP switch output

- DC voltage version with cable

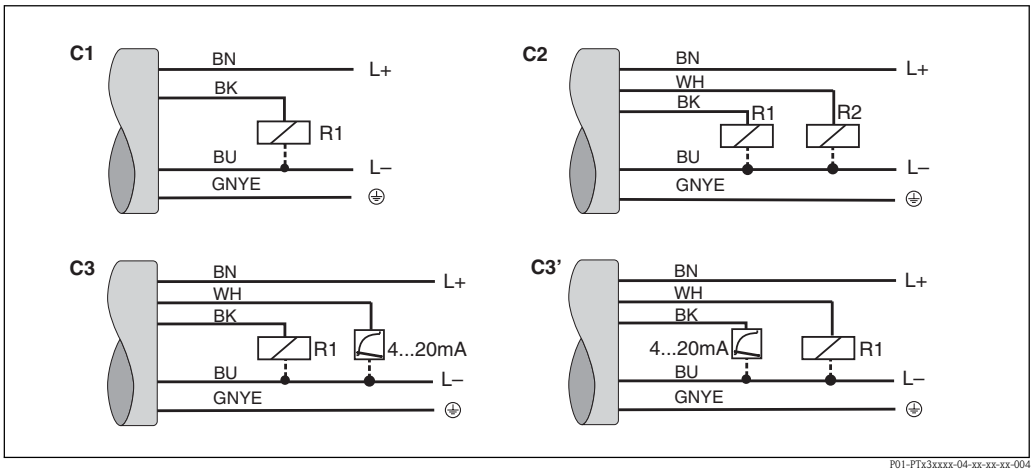

C1: 1x PNP switch output
C2: 2x PNP switch output (in conformity with DESINA)
C3: PNP switch output with additional analog output
C3': PNP switch output with additional analog output (assignment with "DESINA" setting)

Cable specification: all three versions 5-core (4 x 0.2 mm², PE 0.75 mm²)
– Core colours: BN = brown, BK = black, WH = white, BU = blue, GNYE = green/yellow

Supply voltage	■ DC voltage version 12...30 V DC
Current consumption	Without load < 60 mA, with reverse polarity protection
Power supply failure	■ Behaviour in case of overvoltage The device works continuously without any damage up to 34 V DC. The specific properties are no longer guaranteed if the supply voltage is exceeded. ■ Behaviour in case of undervoltage If the supply voltage drops below the minimum value, the device switches off (status as if not supplied with power = switch open).

Performance characteristics

The percentage information in the "Performance characteristics" section refer to the upper range limit (URL).

Reference operating conditi-ons	To DIN IEC 60770 or DIN IEC 61003 T = 25 C, relative humidity 45...75 %, ambient air pressure 860...1060 kPa
Switch output	■ Accuracy: deviation < 0.5 % ■ Non-repeatability: < 0.2 % ■ Response time: ≤ 20 ms ■ Settling time: 2...5 ms
Analog output	■ Non-linearity: ≤ 0.2 % (as per limit point method) ■ Non-conformity: Non-linearity + hysteresis + non-repeatability: 0.5 % (as per limit point method) ■ Rise time T_{90}: ≤ 200 ms ■ Settling time T_{99}: ≤ 500 ms
Long-term drift	≤ 0.15 % per year
Long-term reliability	Mean time between failure (MTBF) > 100 years (calculated according to "British Telecom Handbook of Reliability Data No. 5)
Thermal change	≤ ± 1.5 % (-20...+45 °C) ≤ ± 2.0 % (-40...+85 °C) ≤ ± 2.5 % (-40...+100 °C)

Operating conditions: Installation instructions

Installation instructions	■ Any orientation. ■ Any position-dependent zero shift can be corrected. Position adjustment (offset): ±20 % of the upper range limit

Operating conditions: Environment

Ambient temperature range	-40...+85 °C (briefly up to +100 °C)
Storage temperature	-40...+85 °C

Climate class	4K4H to DIN EN 60721-3-4
Degree of protection	■ With M 16x1.5 or ½ NPT valve plug: IP 65 ■ With M 12x1.5 connector when using gauge pressure sensors: IP 66 with M 12x1.5 connector when using absolute pressure sensors: IP 68 (1 mH_2O for max. 1 hour) ■ With cable: IP 68 (1 mH_2O for max. 1 hour)
Shock resistance	50 g to DIN IEC 68-2-27 (11 ms)
Vibration resistance	■ 20 g to DIN IEC 68-2-6 (10-2000Hz) ■ 4 g to German Lloyd GL Guidelines
Electromagnetic compatibility	■ Interference emission as per EN 61326, class B electrical equipment ■ Interference immunity as per EN 61326, appendix A (industrial use) and NAMUR Recommendation NE 21 EMC influence: ≤ 0.5 %

Operating conditions: Process

Medium temperature range	■ PTC 31: –40 °C...+100 °C ■ PTP 31: –40 °C...+100 °C ■ PTP 35: –40 °C...+100 °C (+135 °C for max. 1 hour)
Limiting medium pressure range	■ For overload resistance see "Ordering information" section ■ Vacuum resistance For ceramic sensor with nominal value >100 mbar: 0 $mbar_{abs}$ For ceramic sensor 100 mbar: 700 $mbar_{abs}$ For metal sensor: 10 $mbar_{abs}$
Pressure specifications	The maximum pressure for the measuring device is dependent on the weakest element with regard to pressure, see the following sections for this: – Ordering information: "Measuring range" – Mechanical construction The MWP (maximum working pressure) is specified on the nameplate. This value refers to a reference temperature of +20 °C and may be applied to the device for an unlimited time. The test pressure (Over Pressure Limit OPL) corresponds to 1.5 times the MWP and may be applied for a limited time only in order to avoid lasting damage.

Mechanical construction

Design, dimensions

Dimensions

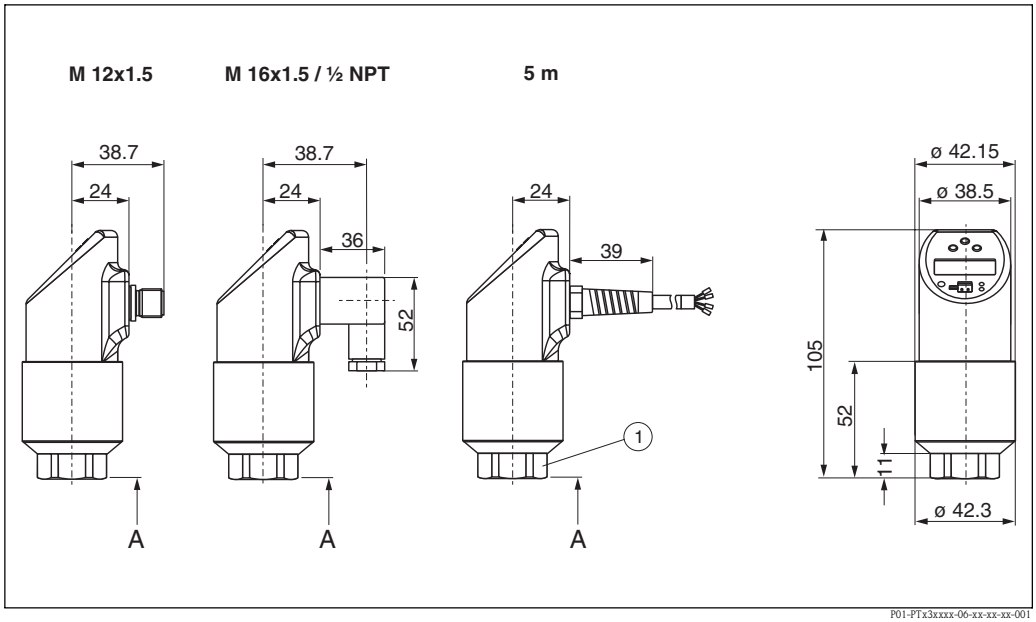

M 12x1.5 connector to IEC 60947-5-2

M 16x1.5 or ½ NPT valve plug as per DIN 43650A/ISO 4400

Cable 5 m long, cable outer diameter 7.7 mm; cores 4 x 0.2 mm², PE 0.75 mm²
reference pressure hose with outer diameter 2.5 mm

① Across flats AF 27 (for 400 bar sensor AF 32)
A = height dimension of process connections – see next diagrams
(all dimensions in mm)

Process connection

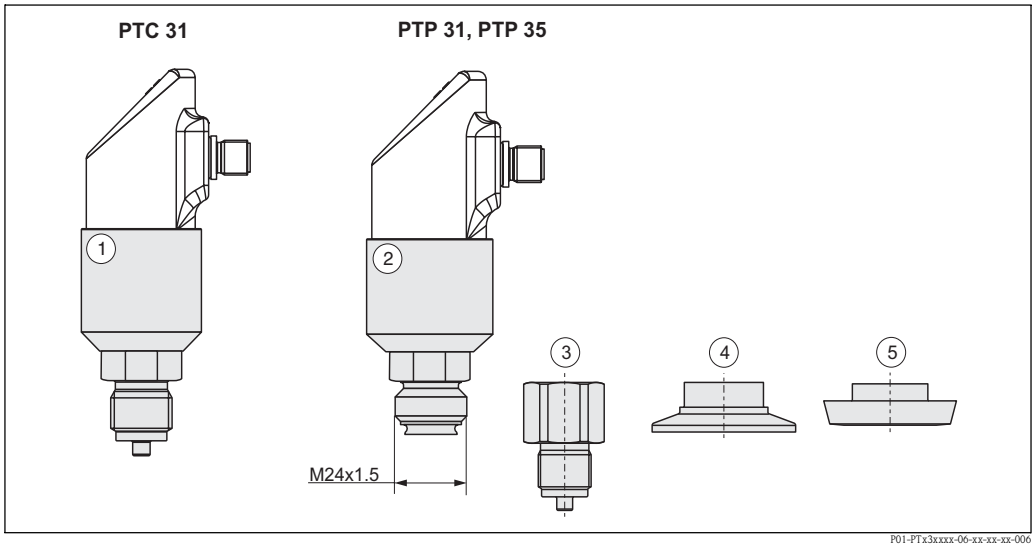

PTC 31: sensor module ① with process connection.

PTP 31/35: sensor module ② with M24x1.5 adapter thread for adapters with process connection.

Adapter (mounted onto sensor module at the factory, 400 bar thread adapter welded onto sensor module)
③ Adapter with thread connection
④ Adapter with clamp connection (except ½" clamp)
⑤ Adapter with hygiene connection (except G 1A)

Process connections PTC 31 sensor module with ceramic sensor

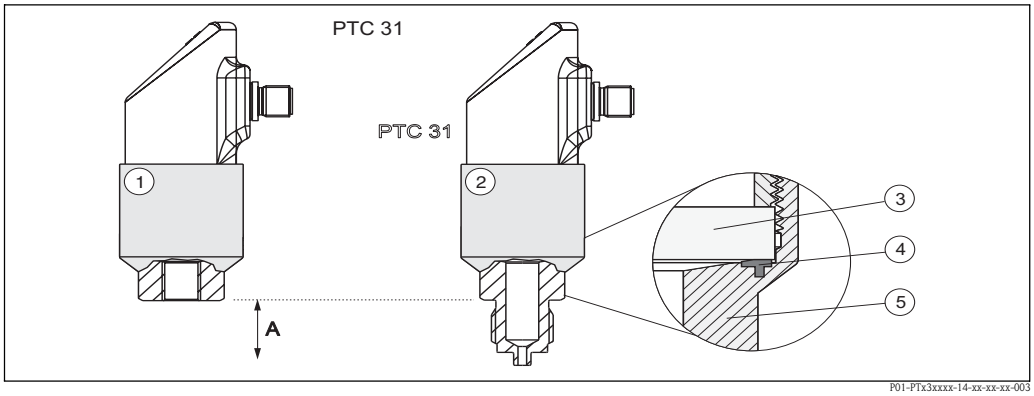

PTC 31; sensor module with process connection
① with internal thread
② with external thread

"Seal" detail: ③ Ceraphire ceramic sensor, ④ moulded seal, in contact with process, ⑤ sensor module

Dimension A: see the following dimension drawings (*)

Thread connections

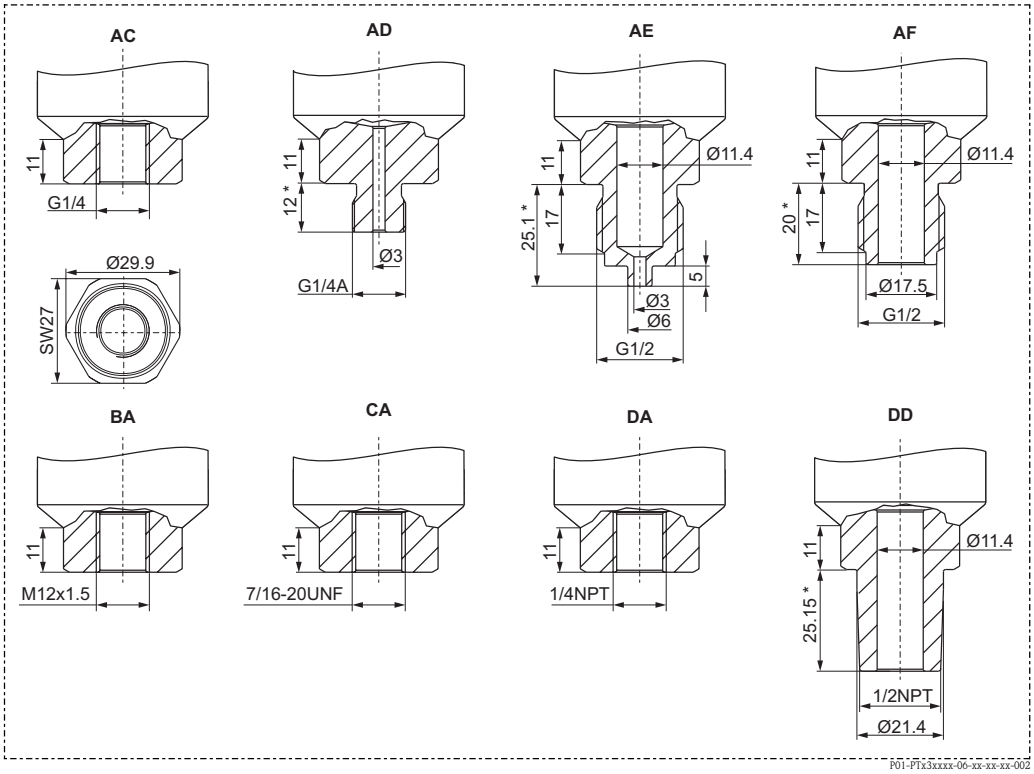

Process connection versions (see also "Ordering information" section)
AC: thread ISO 288, G¼ (female)
AD: thread ISO 288, G¼A
AE: thread ISO 288, G½A
AF: thread ISO 288, G½A, bore 11 mm
BA: Thread DIN 13, M 12x1.5
CA: thread 7/16-20 UNF (SAE)
DA: thread ANSI ¼ FNPT
DD: thread ANSI ½ MNPT

(all dimensions in mm)

Process connections PTP sensor module with metallic sensor diaphragm

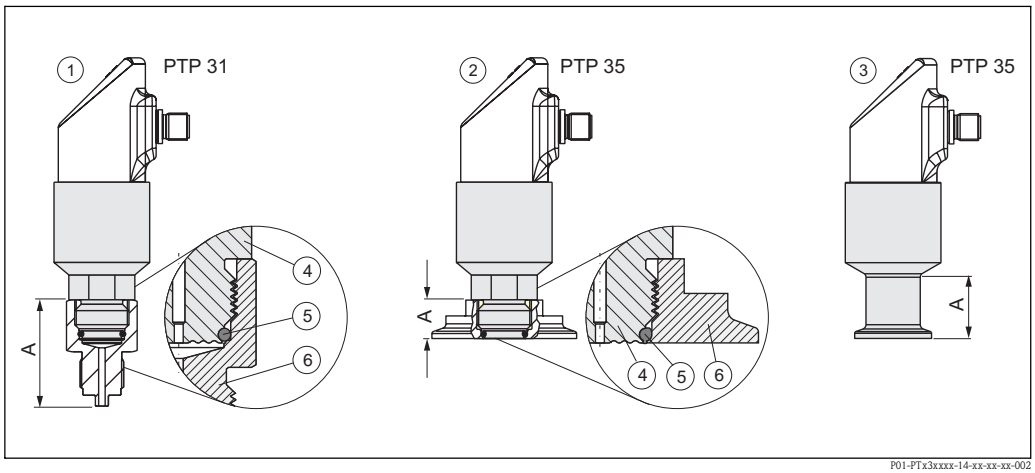

① *Sensor module with adapter thread for adapters with thread connection*
② *Sensor module with adapter thread for adapters with clamp or hygiene connection*
③ *Sensor module with clamp or hygiene connection (only versions DA, BA, BB)*

"Seal" detail: ④ sensor module, ⑤ Standard O-ring, in contact with process, ⑥ adapter

Dimension A: see the following dimension drawing (*). For 400 bar sensor see also Page 12.

Process connections PTP 31 thread connections

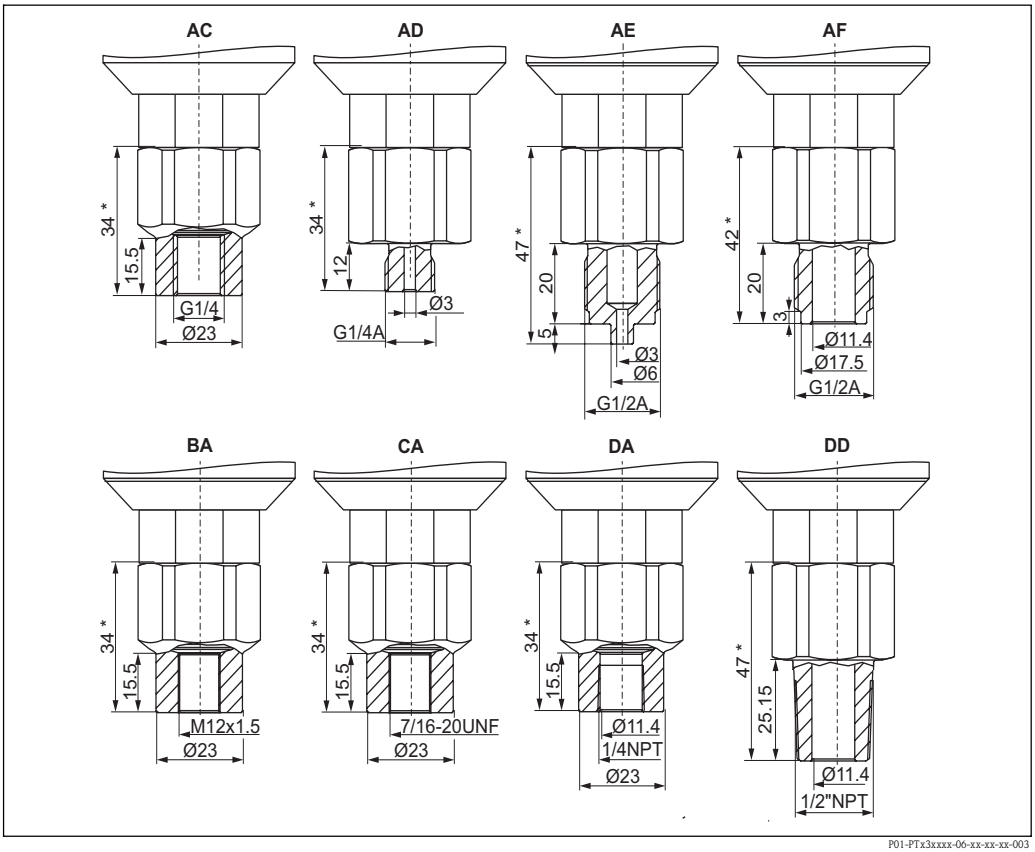

Process connection versions: sensor module with adapter (see also "Ordering information" section)
AC: thread ISO 228, G¼ (female)
AD: thread ISO 228, G¼A
AE: thread ISO 228, G½A
AF: thread ISO 228, G½A, bore 11 mm
BA: Thread DIN 13, M 12x1.5
CA: thread 7/16-20 UNF (SAE)
DA: thread ANSI ¼ FNPT
DD: thread ANSI ½ MNPT

(all dimensions in mm)

Process connections PTP 35*clamp connections

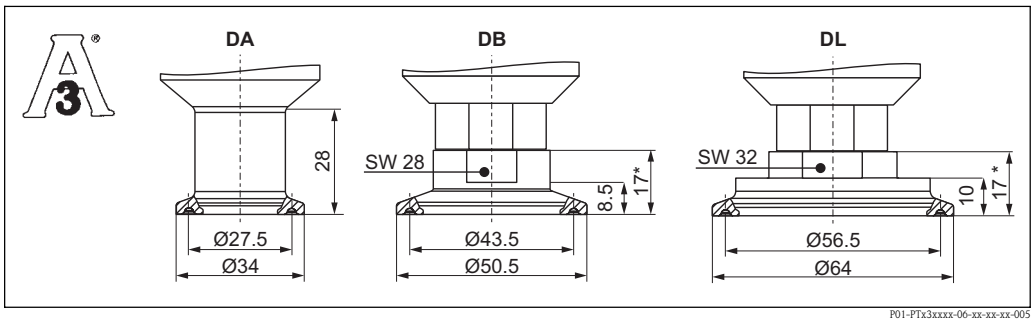

Process connection version
DA: clamp ½"...¾" (ISO 2852) or DN 10...DN 20 (DIN 32676)

Process connection versions (sensor module with adapter)
DB: clamp 1"...1½" (ISO 2852) or DN 25...DN 40 (DIN 32676)
DL: clamp 2" (ISO 2852) or DN 50 (DIN 32676)

See also "Ordering information" section
(all dimensions in mm)

Process connections PTP 35 hygiene connections

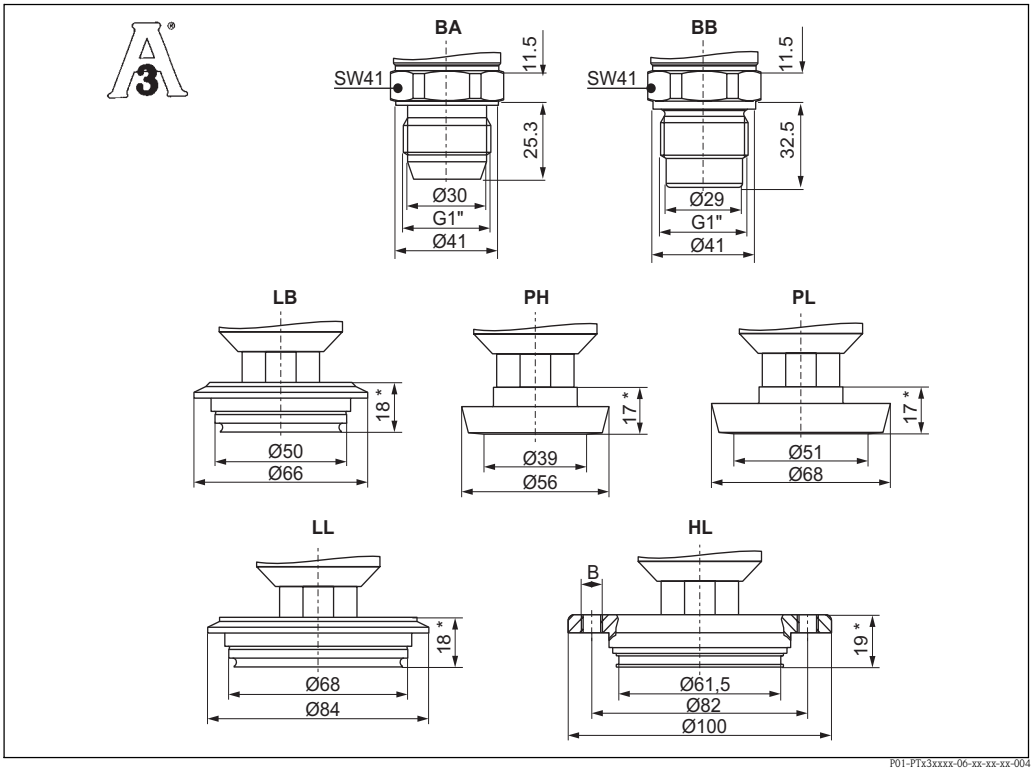

Process connection versions
BA: thread ISO228 G1A, metal taper seal
BB: thread ISO228 G1A, O-ring seat seal

Process connection versions (sensor module with adapter)
LB: Varivent F pipe DN 25-32, PN 40
LL: Varivent N pipe DN 40-162, PN 40
PH: DIN 11851, DN 40, PN 40 (including coupling nut)
PL: DIN 11851, DN 50, PN 40 (including coupling nut)
HL: APV inline, DN 50, PN 40, (B = bores 6 x Ø8.6 + 2 x M8 thread)

See also "Ordering information" section
(all dimensions in mm)

PTP 31 with 400 bar sensor	■ Across flats on sensor module AF 32 ■ Sensor module welded to thread adapter ■ For ¼ NPT thread connections, M12x1.5, 7/16-20UNF: dimension A 5 mm longer For ½ NPT thread connections, G ½A: dimension A 1 mm longer
Weight	■ PTC 31: approx. 0.32 kg ■ PTP 31: approx. 0.37 kg ■ PTP 35: approx. 0.58 kg (with clamp process connection 1...1½")
Material	■ Process connection: AISI 316L Surfaces in contact with the process for PTP 35 with electronically polished surface $R_a \leq 0.8$ µm Coupling nut: AISI 304 ■ Sensor diaphragm for PTC 31: Ceraphire® (99.9 % Al_2O_3), FDA number: 21-CFR 186.1256 Sensor diaphragm for PTP 31/35: AISI 316L ■ Filling oil for PTP 31 and PTP 35: mineral oil, FDA number: 21-CFR 172.882 ■ Seals: FKM Viton EPDM, FDA number 21-CFR 177.2600 ■ Housing: AISI 316L, with electronically polished surface $R_a \leq 0.8$ µm ■ Valve plug: polyamide (PA) M12 connector: exterior 316L, interior polyamide (PA) Cable outer covering: polyurethane (PUR/UL94, V0, UV-resistant) ■ Display: polycarbonate PC-FR (Lexan®) ■ Keys: polycarbonate PC-FR (Lexan®)

Human interface

Operating elements

Position and meaning of display and operating elements.

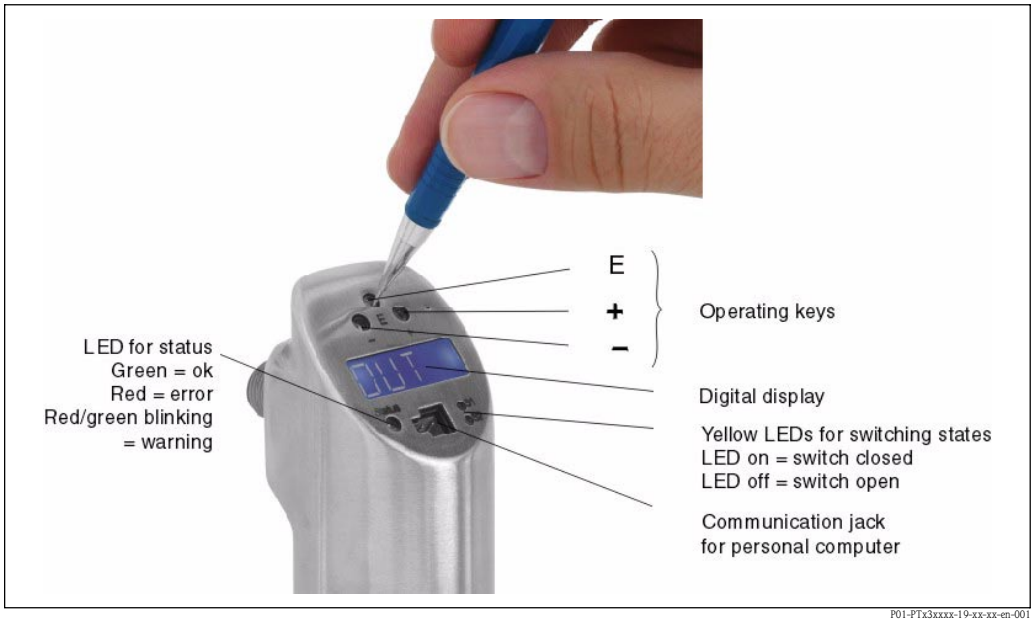

P01-PTx3xxxx-19-xx-xx-en-001

The background illumination of the digital display indicates the status of the device: white = ok; red = error

On-site operation

Menu-guided operation using operating keys.

Function group	Operating options
BASE (basic functions)	Selection of unit: bar, psi, kPa/MPa
	Position adjustment: ±20 % of the upper range limit
	Damping display value, output signal: anywhere between 0...40 s (in increments of 0.1 s)
	Display: – Display of measured value or configured switch point – Rotation of display by 180° – Switching off display
	Behaviour according to DESINA: The PIN assignment of the M12 connector is in accordance with the guidelines of DESINA (distributed and standardised installation technology for machine tools and manufacturing systems)
	Switch to SIL mode (functional safety)

Function group	Operating options
OUT (Configuration of 1st output)	Output function: – Hysteresis function or window function – NC contact or NO contact (see next diagram) – Analog output 4...20 mA
	Switch point: – Input value – Acceptance of applied value Switch point anywhere between 0.5...100 % of the upper range limit (URL), (in increments of 0.1 %, min. 1 mbar)
	Switch-back point: – Input value – Acceptance of applied value Switch-back point anywhere between 0...99.5 % of the upper range limit (URL), (in increments of 0.1 %, min. 1 mbar)
	Switch output delay: anywhere between 0...99 s (in increments of 0.1 s)
OUT 2 (Configuration of 2nd output, only for corresponding electronics version)	Output function: – Hysteresis function or window function – NC contact or NO contact (see next diagram) – Analog output 4...20 mA
	Switch point 2: – Input value – Acceptance of applied value Switch point anywhere between 0.5...100 % of the upper range limit (URL), (in increments of 0.1 %, min. 1 mbar)
	Switch-back point 2: – Input value – Acceptance of applied value Switch-back value anywhere between 0...99.5 % of the upper range limit (URL), (in increments of 0.1 %, min. 1 mbar)
	Switch output delay: anywhere between 0...99 s (in increments of 0.1 s)
4-20 (configuration of analog output, only for corresponding electronic version)	Lower range value (LRV) and upper range value (URV) of analog output: – Input value – Acceptance of applied value Anywhere within sensor range (in increments of 0.1 %); turn down up to 4 : 1
	Setting of error current: choice of 3.5 mA / 21.7 mA / last current value
SERV (service functions)	Resetting of all settings to factory settings
	Static Revision Counter (configuration counter; increases by one with every change in configuration)
	Locking by means of freely selectable code
	Display of last error to occur
	Simulation of switch output and analog output
	Display of max. measured pressure value
	Display of min. measured pressure value

Functions of switch output

- Hysteresis function
  The hysteresis function enables two-point control via a hysteresis. Depending on the pressure p, the hysteresis can be set via the switch point SP and the switch-back point RSP.
- Window function
  The window function enables the monitoring of a process pressure range.
- NO contact or NC contact
  This switch function is freely selectable.

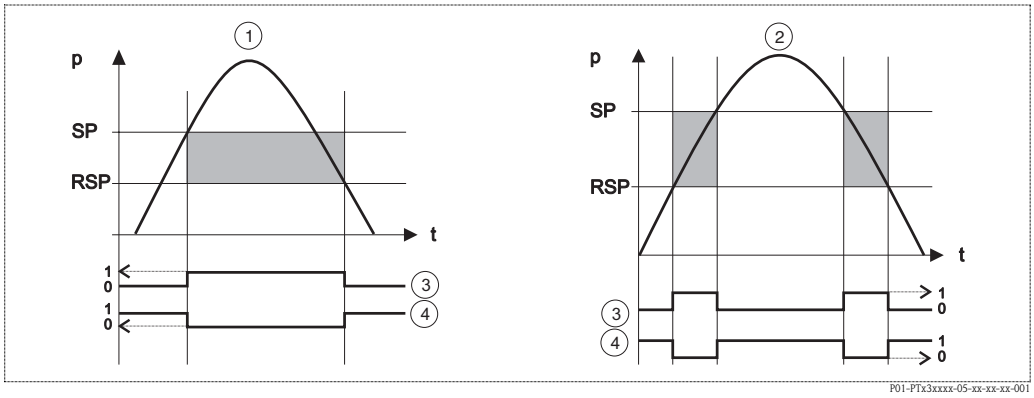

① *Hysteresis function,* ② *Window function,* ③ *NO contact switch status,* ④ *NC contact switch status*

Switch point SP; Switch-back point RSP

Operation with ReadWin®2000

Operation, visualisation and maintenance with personal computer and ReadWin 2000 configuration software

P01-PTx3xxxx-19-xx-xx-en-002

① *Personal computer with ReadWin 2000 configuration software*
② *Configuration kit (USB interface)*
③ *Ceraphant T with communication jack*

In addition to the operating options listed in the previous "On-site operation" section, the ReadWin 2000 configuration software provides further information on the Ceraphant T:

Function group	Description
SERVICE	Number of switch changes
	Device status/error
INFO	Tag number
	Order code
	Device serial number
	Sensor serial number
	Electronics serial number
	Device release (change status)
	Hardware version
	Software version

Comprehensive information on the ReadWin 2000 configuration software may be found in the Operating Instructions
BA 137R/09/en.

Certificates and approvals

CE mark	The device meets the legal requirements of the EC directives. Endress+Hauser confirms that the device has been successfully tested by applying the CE mark.
UL listing	The device was examined by Underwriters Laboratories Inc. USA (UL) in accordance with the standards UL 61010B-1 and CSA C22.2 No. 1010.1-92 and listed under the number E225237 UL for Canada and the USA.
Pressure Equipment Directive	This measuring device corresponds to Article 3 (3) of the EC Directive 97/23/EC (Pressure Equipment Directive) and has been designed and manufactured according to good engineering practice.
Hygiene standard	The Ceraphant T PTP 35 meets the requirements of the Sanitary Standard No. 74-2. Endress+Hauser confirms this by applying the 3-A symbol.
Functional safety	The pressure switches Ceraphant PTC 31 and PTP 31/35 with PNP switch output and additional analog output meet the requirements for functional safety as per IEC 61508 / IEC 61511-1 (FDIS). Thus, they can be used for limit pressure monitoring to SIL 2.
Standards and guidelines	DIN EN 60770 (IEC 60770): Transmitters for use in industrial-process control systems Part 1: Methods for performance evaluation. DIN EN 61003-1, publication date:1993-12 Industrial-process control systems - Instruments with analog inputs and two- or multi-state outputs - Part 1: Methods of evaluating the performance. DIN 16086: Electrical pressure measuring instruments; pressure sensors, pressure transmitters, pressure measuring instruments; concepts, specifications on data sheets IEC 60592 Degrees of protection provided by enclosures (IP code). EN 61326: Electrical equipment for measurement, control and laboratory use - EMC requirements. IEC 61010 Safety requirements for electrical equipment for measurement, control and laboratory use. EN 61000-4-5: Electromagnetic compatibility (EMC) - Part 4: Testing and measurement techniques; Section 5: Surge immunity test NAMUR Association for Standards for Control and Regulation in the Chemical Industry.
Registered trademarks	Ceraphire® Registered trademark of Endress+Hauser GmbH+Co.KG, Maulburg, Germany ReadWin® Registered trademark of Endress+Hauser Wetzer GmbH+Co.KG, Nesselwang, Germany LEXAN® Registered trademark of General Electric Plastics B.V., Bergen op Zoom, Netherlands

Ordering information

Ceraphant T PTC31

10	Certificate
R	For non-hazardous areas

20	Electrical connection
1	M12x1.5 connector; IP66
2	M16x1.5 valve plug, ISO4400; IP65
3	½NPT valve plug, ISO4400; IP65
4	5 m cable; IP66/68

30	Electronics, output signal
A	12...30V DC, PNP switch, 3-wire
B	12...30V DC, 2 PNP switch, 4-wire
C	12...30 V DC, PNP switch + 4...20mA, 4-wire, functional safety SIL 2

40	Display
1	With digital display

50	Sensor	
	Gauge pressure	Permitted overload
1C	0...100 mbar / 0...10 kPa	4 bar
1F	0...400 mbar / 0...40 kPa	6 bar
1H	0...1 bar / 0...100 kPa	10 bar
1M	0...4 bar / 0...400 kPa	24 bar
1P	0...10 bar / 0...1000 kPa	40 bar
1S	0...40 bar / 0...4000 kPa	60 bar
	Negative gauge pressure	Permitted overload
5C	-100...100 mbar / -10...10 kPa	4 bar
5F	-400...400 mbar / -40...40 kPa	6 bar
5H	-1...1 bar / -100...100 kPa	10 bar
5M	-1...4 bar / -100...400 kPa	24 bar
5P	-1...10 bar / -100...1000 kPa	40 bar
	Absolute pressure	Permitted overload
2F	0...400 mbar / 0...40 kPa	6 bar
2H	0...1 bar / 0...100 kPa	10 bar
2M	0...4 bar / 0...400 kPa	24 bar
2P	0...10 bar / 0...1000 kPa	40 bar
2S	0...40 bar / 0...4000 kPa	60 bar

60	Configuration and unit	
1	Configured sensor range: mbar/bar	Calibration in sensor range
2	Configured sensor range: kPa/MPa	Calibration in sensor range
3	Configured sensor range: psi	Calibration in sensor range
S	Configured switch output 1 to additional spec.	Calibration in sensor range
T	Configured switch output 1 + 2 to additional spec.	Calibration in sensor range
U	Configured switch and analog output to additional spec.	Calibration in sensor range

70	Process connection, material
AC	Thread ISO288, G¼ (female), 316L
AD	Thread ISO228, G¼A, 316L
AE	Thread ISO228, G½A, 316L
AF	Thread ISO228, G½A, bore 11 mm, 316L
BA	Thread DIN13, M12x1.5, 316L
CA	Thread 7/16-20 UNF (SAE), 316L
DA	Thread ANSI ¼FNPT, 316L
DD	Thread ANSI ½MNPT, 316L

80	Sensor seal (in contact with process)
1	FKM Viton sensor seal
4	EPDM sensor seal
6	FKM Viton sensor seal, cleaned for O_2 service

90	Additional equipment
A	Without additional equipment
C	3.1.B process connection, inspection certificate to EN10204

PTC 31 -										

A.P.O. - ELMOS v.o.s., Pražská 90, 509 01 Nová Paka, Tel.: +420 493 504 261, Fax: +420 493 504 257, E-mail: apo@apoelmos.cz, Internet: www.apoelmos.cz

Ceraphant T PTP31

10	Certificate
R	For non-hazardous areas

20	Electrical connection
1	M12x1.5 connector; IP66
2	M16x1.5 valve plug, ISO4400; IP65
3	½NPT valve plug, ISO4400; IP65
4	5 m cable; IP66/68

30	Electronics, output signal
A	12...30V DC, PNP switch, 3-wire
B	12...30V DC, 2 PNP switch, 4-wire
C	12...30 V DC, PNP switch + 4...20mA, 4-wire, functional safety SIL 2

40	Display
1	With digital display

50	Sensor	
	Gauge pressure	Permitted overload
3H	0...1 bar / 0...100 kPa	4 bar
3M	0...4 bar / 0...400 kPa	16 bar
3P	0...10 bar / 0...1000 kPa	40 bar
3S	0...40 bar / 0...4000 kPa	160 bar
3U	0...100 bar / 0...10 MPa	400 bar
3Z	0...400 bar / 0...40 MPa	600 bar
	Negative gauge pressure	Permitted overload
7H	-1...1 bar / -100...100 kPa	4 bar
7M	-1...4 bar / -100...400 kPa	16 bar
7P	-1...10 bar / -100...1000 kPa	40 bar
	Absolute pressure	Permitted overload
4H	0...1 bar / 0...100 kPa	4 bar
4M	0...4 bar / 0...400 kPa	16 bar
4P	0...10 bar / 0...1000 kPa	40 bar
4S	0...40 bar / 0...4000 kPa	160 bar
4U	0...100 bar / 0...10 MPa	400 bar
4Z	0...400 bar / 0...40 MPa	600 bar

60	Configuration and unit	
1	Configured sensor range: mbar/bar	Calibration in sensor range
2	Configured sensor range: kPa/MPa	Calibration in sensor range
3	Configured sensor range: psi	Calibration in sensor range
S	Configured switch output 1 to additional spec.	Calibration in sensor range
T	Configured switch output 1 + 2 to additional spec.	Calibration in sensor range
U	Configured switch and analog output to additional spec.	Calibration in sensor range

70	Process connection, material
AC	Thread ISO288, G¼ (female), 316L
AD	Thread ISO228, G¼A, 316L
AE	Thread ISO228, G½A, 316L
AF	Thread ISO228, G½A, bore 11 mm, 316L
BA	Thread DIN13, M12x1.5, 316L
CA	Thread 7/16-20 UNF (SAE), 316L
DA	Thread ANSI ¼FNPT, 316L
DD	Thread ANSI ½MNPT, 316L

80	Seal, filling fluid
1	O-ring FKM Viton, mineral oil
7	Welded, mineral oil (only for 400 bar sensor)

90	Additional equipment
A	Without additional equipment
C	3.1.B process connection, inspection certificate to EN10204

PTP 31 -										

Ceraphant T PTP35

10	Certificate
R	For non-hazardous areas

20	Electrical connection
1	M12x1.5 connector; IP66
2	M16x1.5 valve plug, ISO4400; IP65
3	½NPT valve plug, ISO4400; IP65
4	5 m cable; IP66/68

30	Electronics, output signal
A	12...30V DC, PNP switch, 3-wire
B	12...30V DC, 2 PNP switch, 4-wire
C	12...30 V DC, PNP switch + 4...20mA, 4-wire, functional safety SIL 2

40	Display
1	With digital display

50	Sensor	
Gauge pressure		Permitted overload
3H	0...1 bar / 0...100 kPa	4 bar
3M	0...4 bar / 0...400 kPa	16 bar
3P	0...10 bar / 0...1000 kPa	40 bar
3S	0...40 bar / 0...4000 kPa	160 bar
Negative gauge pressure		Permitted overload
7H	-1...1 bar / -100...100 kPa	4 bar
7M	-1...4 bar / -100...400 kPa	16 bar
7P	-1...10 bar / -100...1000 kPa	40 bar
Absolute pressure		Permitted overload
4H	0...1 bar / 0...100 kPa	4 bar
4M	0...4 bar / 0...400 kPa	16 bar
4P	0...10 bar / 0...1000 kPa	40 bar
4S	0...40 bar / 0...4000 kPa	160 bar

60	Configuration and unit	
1	Configured sensor range: mbar/bar	Calibration in sensor range
2	Configured sensor range: kPa/MPa	Calibration in sensor range
3	Configured sensor range: psi	Calibration in sensor range
S	Configured switch output 1 to additional spec.	Calibration in sensor range
T	Configured switch output 1 + 2 to additional spec.	Calibration in sensor range
U	Configured switch and analog output to additional spec.	Calibration in sensor range

70	Process connection, material
Clamp connections	
DA	ISO2852 DN12-22 (½...¾"), 316L, 3A, DIN32676, DN10-20
DB	ISO2852 DN25-38 (1...1½"), 316L, 3A, DIN32676, DN25-40
DL	ISO2852 DN40-51 (2"), 316L, 3A, DIN32676, DN50
Hygienic connections	
BA	Thread ISO228 G1A, metal taper seal, 316L, 3A, flush-mounted for sleeve 52005087
BB	Thread ISO228 G1A, O-ring seat seal, 316L, 3A, flush-mounted for sleeve 52001051
LB	Varivent F pipe DN25-32, PN40, 316L, 3A
LL	Varivent N pipe DN40-162, PN40, 316L, 3A
PH	DIN11851 DN40 PN40, 316L, 3A
PL	DIN11851 DN50 PN40, 316L, 3A
HL	APV inline DN50 PN40, 316L, 3A

80	Seal, filling fluid
4	O-ring EPDM, oil conform to FDA
8	Without O-ring, oil in conformity with FDA (only for process connections BA, BB, DA)

90	Additional equipment
A	Without additional equipment
C	3.1.B process connection, inspection certificate to EN10204

PTP 35 -									

Questionnaire on customer-specific configuration

The Ceraphant T pressure switch can also be ordered with customised settings. For this purpose, please use the questionnaire below. Information on the desired switch point (SP), switch-back point (RSP), lower range value and upper range value always refer to the pressure unit selected. The possible range of adjustment is indicated in the questionnaire in % of the upper range limit (URL).

Questionnaire for Ceraphant PTC31, PTP31, PTP35 for customer specific setup

Pressure unit **( ) mbar/bar** ( ) kPa/MPa ( ) psi

Output 1
( ) **1=Hysteresis normally open**
( ) 2=Hysteresis normally closed
( ) 3=Window normally open
( ) 4=Window normally closed

SP: [ ] Range of adjustment: 0,5...100 % URL (in increments of 0.1 %, min. 1 mbar)

RSP: [ ] Range of adjustment: 0...99,5 % URL (in increments of 0.1 %, min. 1 mbar)

Output 2 (only if available /Code B)
( ) **1 = Hysteresis normally open**
( ) 2 = Hysteresis normally closed
( ) 3 = Window normally open
( ) 4 = Window normally closed

SP: [ ] Range of adjustment: 0,5...100 % URL (in increments of 0.1 %, min. 1 mbar)

RSP: [ ] Range of adjustment: 0...99,5 % URL (in increments of 0.1 %, min. 1 mbar)

Analogue output (only if output 2 = 4...20 mA /Code C)
( ) 5 = 4…20 mA only if available

Range low scale: [ ] Range of adjustment: 0....100 % URL

Range high scale: [ ] Range of adjustment: 0....100 % URL
Turn down up to 4 : 1

Failure mode: ( ) ≤ 3.6 mA **( ) ≥ 21.0 mA** ( ) last current value
Connection conform to DESINA): **( ) no** ( ) yes

TAG
(2 x 18 characters) [ ]

Endress+Hauser
People for Process Automation

P01-PTx3xxxx-16-xx-xx-en-001

Accessories

Welding boss
– with sealing taper

- Welding boss for flush mounting process connection G1 A with metallic sealing taper (version BA for PTP 35)
  Material: AISI 316L
  Order number: 52005087
- Optional with inspection certificate 3.1.B
  Order number: 52010171
- Welding aid (Dummy) for welding the welding boss without any problems, order number 52005087 or 52010171
  Material: brass
  Order number: 52005272

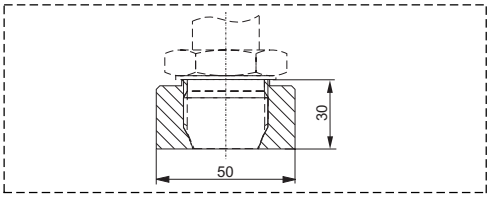

P01-Pxxxxxxx-00-xx-00-xx-001

Welding boss
– with sealing surface

- Welding boss for flush mounting process connection G1 A with sealing surface (version BB for PTP 35)
  Material: AISI 316L
  Seal (enclosed): silicone O-ring
  Order number: 52001051
- Optional with inspection certificate 3.1.B
  Order number: 52011196

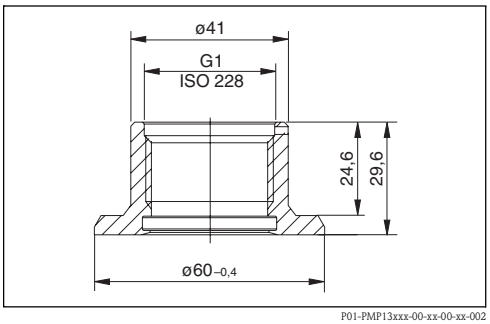

P01-PMP13xxx-00-xx-00-xx-002

Thread adapter

- PTP 31: order numbers for thread adapter versions.

  Version AC: order no. 52023980
  Version AD: order no. 52023981
  Version AE: order no. 52023982
  Version AF: order no. 52023983
  Version BA: order no. 52023984
  Version CA: order no. 52023985
  Version DA: order no. 52023986
  Version DD: order no. 52023987

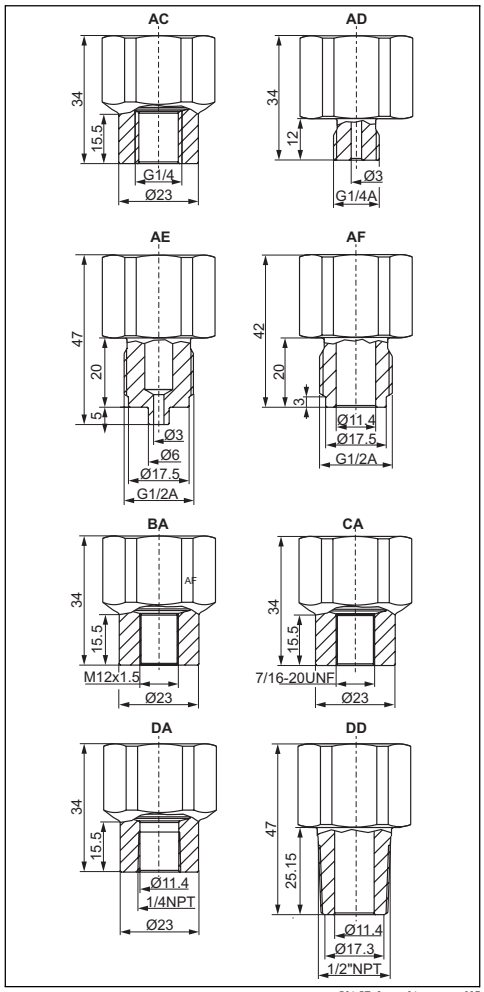

P01-PTx3xxxx-06-xx-xx-xx-007

Clamp adapter

- PTP 35: Order numbers for clamp adapter versions.

  Version DB: order no. 52023994
  Version DL: order no. 52023995

  Optional with inspection certificate 3.1.B:
  Version DB: order no. 52024001
  Version DL: order no. 52024002

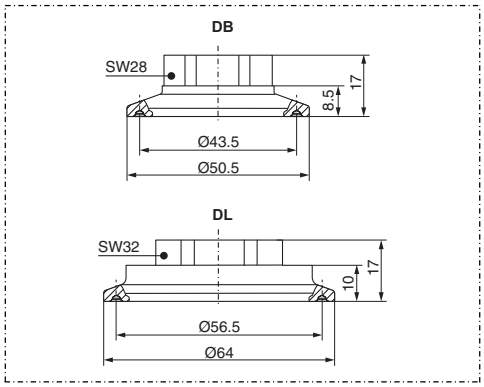

P01-PTx3xxxx-06-xx-xx-xx-009

Hygiene adapter

- PTP 35: order numbers for hygiene adapter versions.

  Version LB: order no. 52023996
  Version LL: order no. 52023997
  Version PH: order no. 52023999
  Version PL: order no. 52023998
  Version HL: order no. 52024000

  Optional with inspection certificate 3.1.B:
  Version LB: order no. 52024003
  Version LL: order no. 52024004
  Version PH: order no. 52024006
  Version PL: order no. 52024005
  Version HL: order no. 52024007

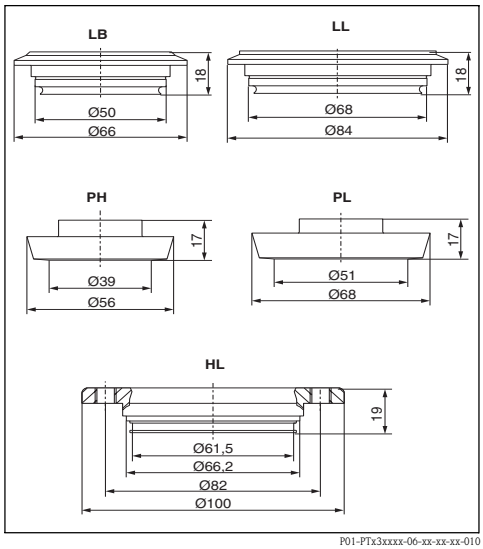

P01-PTx3xxxx-06-xx-xx-xx-010

Plug-in jack

- M 12x1.5 plug-in jack
  Self-made connection to M 12x1.5 plug
  Order number: 52006263

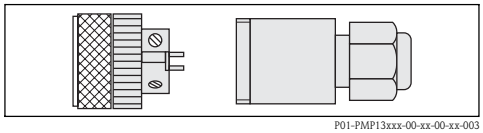
P01-PMP13xxx-00-xx-00-xx-003

- M 12x1.5 plug-in jack, elbowed
  Self-made connection to M 12x1.5 plug
  Order number: 51006327

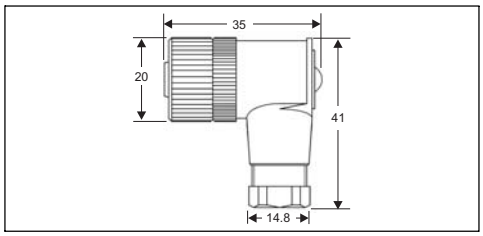

P01-PMP13xxx-00-xx-00-xx-003

Connecting cable

- Cable, 4 x 0.34 mm^2 with M12 socket, elbowed, screw plug, length 5 m, sprayed PVC cable
  order number: 52010285
- Cable, 4 x 0.34 mm^2 with M12 socket, with LED, elbowed, 316L screw plug, length 5 m, sprayed PVC cable,
  specially for hygiene applications,
  order number: 52018763
  Display: gn: device operational;
  ye1: switch status; ye 2: switch status 2

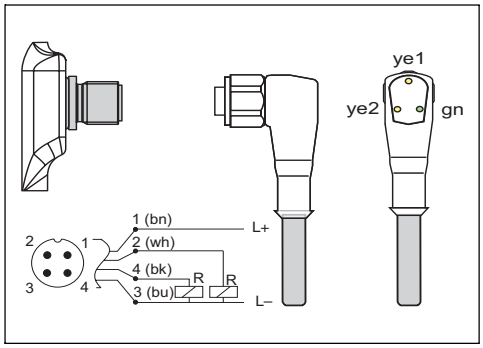

P01-PTx3xxxx-07-xx-xx-xx-001

Configuration kit

- Configuration kit for PC-programmable transmitters. Setup program and interface cable for PCs with USB port. Adapter for transmitters with 4-pin post connector.
  Order code: TXU10-AA
- ReadWin® 2000 is supplied with the configuration kit or it can be downloaded free of charge directly from the internet at the following address: www.readwin2000.com

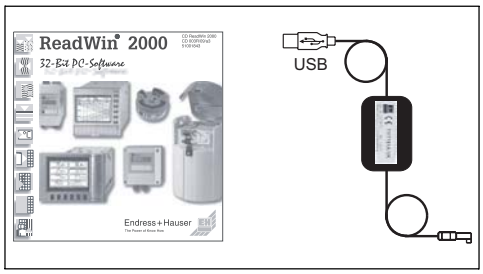

P01-PTxx3xxx-00-xx-00-xx-001

Documentation

Technical Information	Technical Information on the Thermophant T temperature switch: Thermophant T TTR 31, TTR 35 TI 105R/09/en
Operating Instructions	Ceraphant T PTC 31, PTP 31, PTP35 KA 225P/00/a2, order no. 52023159 Operating software ReadWin 2000 BA 137R/09/en
Safety instructions	■ ATEX Safety instructions for electrical equipment for use in hazardous locations (in development). ■ Functional Safety Manual (SIL) SD 176P/00/en (in development)

Endress+Hauser
People for Process Automation